DC Iron

Composite Board Post

code: **CGBP01**

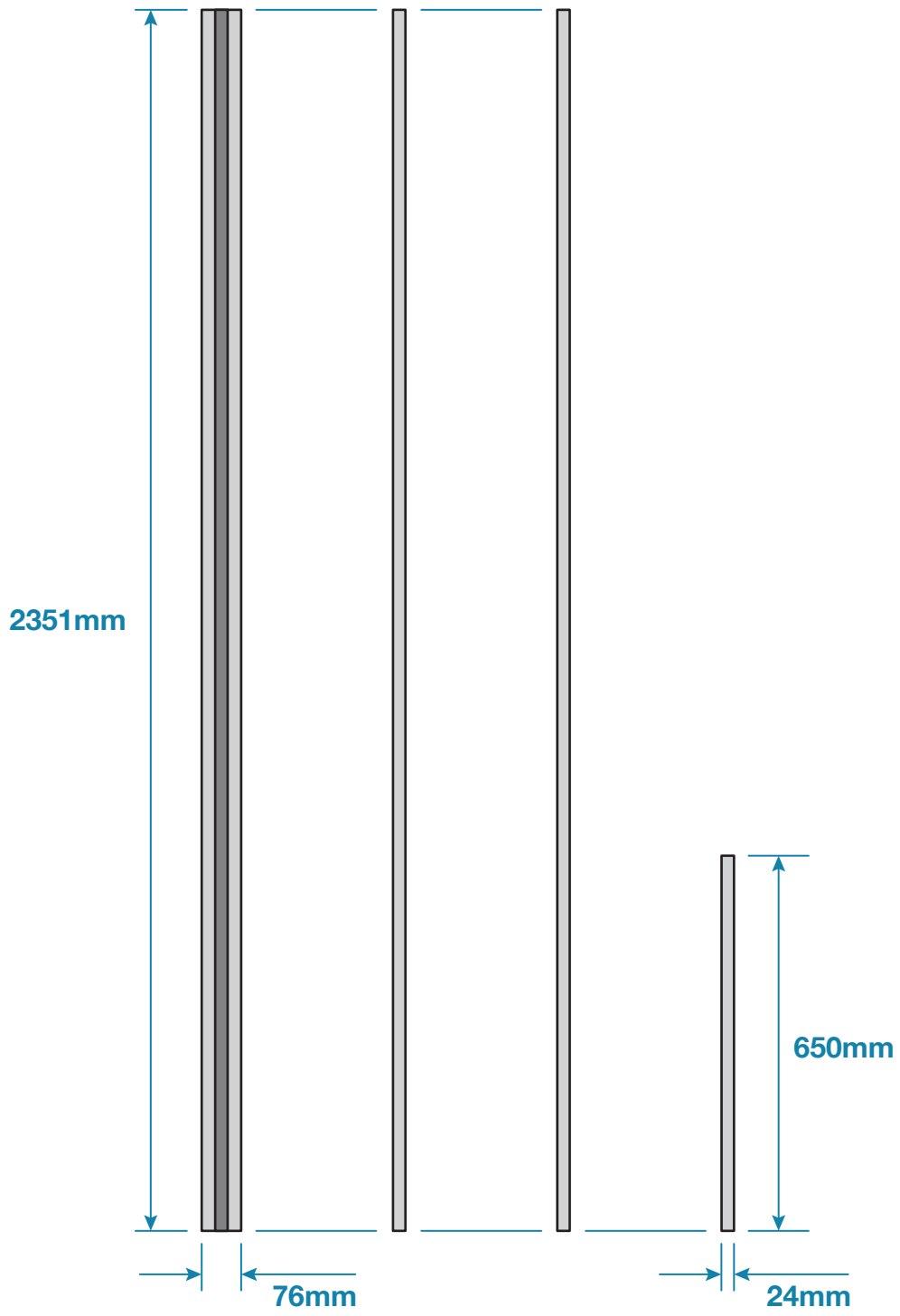

Please Note: Dimensions for guide only. Components may vary slightly from the sizes shown.

Updated: 05-11-2024

DC Iron

Composite Board Post

code: **CGBP01**

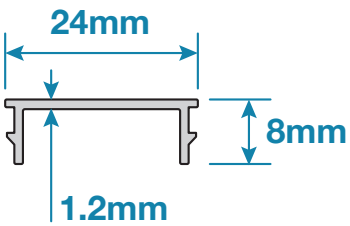

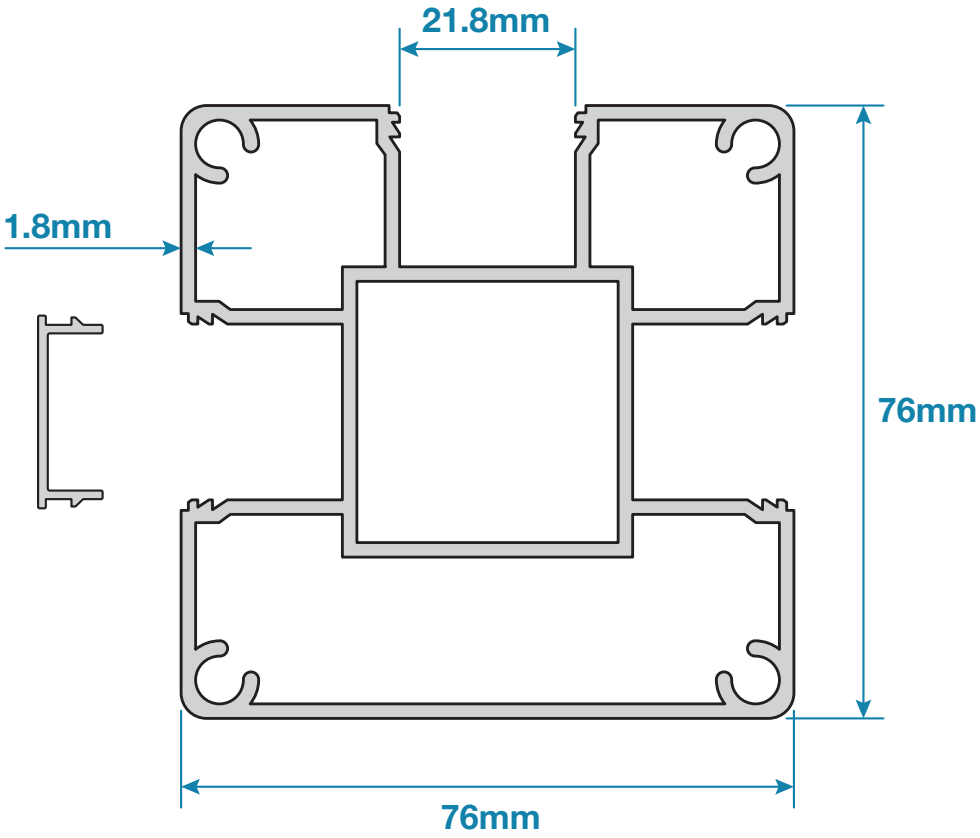

Please Note: Dimensions for guide only. Components may vary slightly from the sizes shown.

Updated: 05-11-2024